NAUTILUS RAIL SYSTEM
DESIGN PARAMETERS

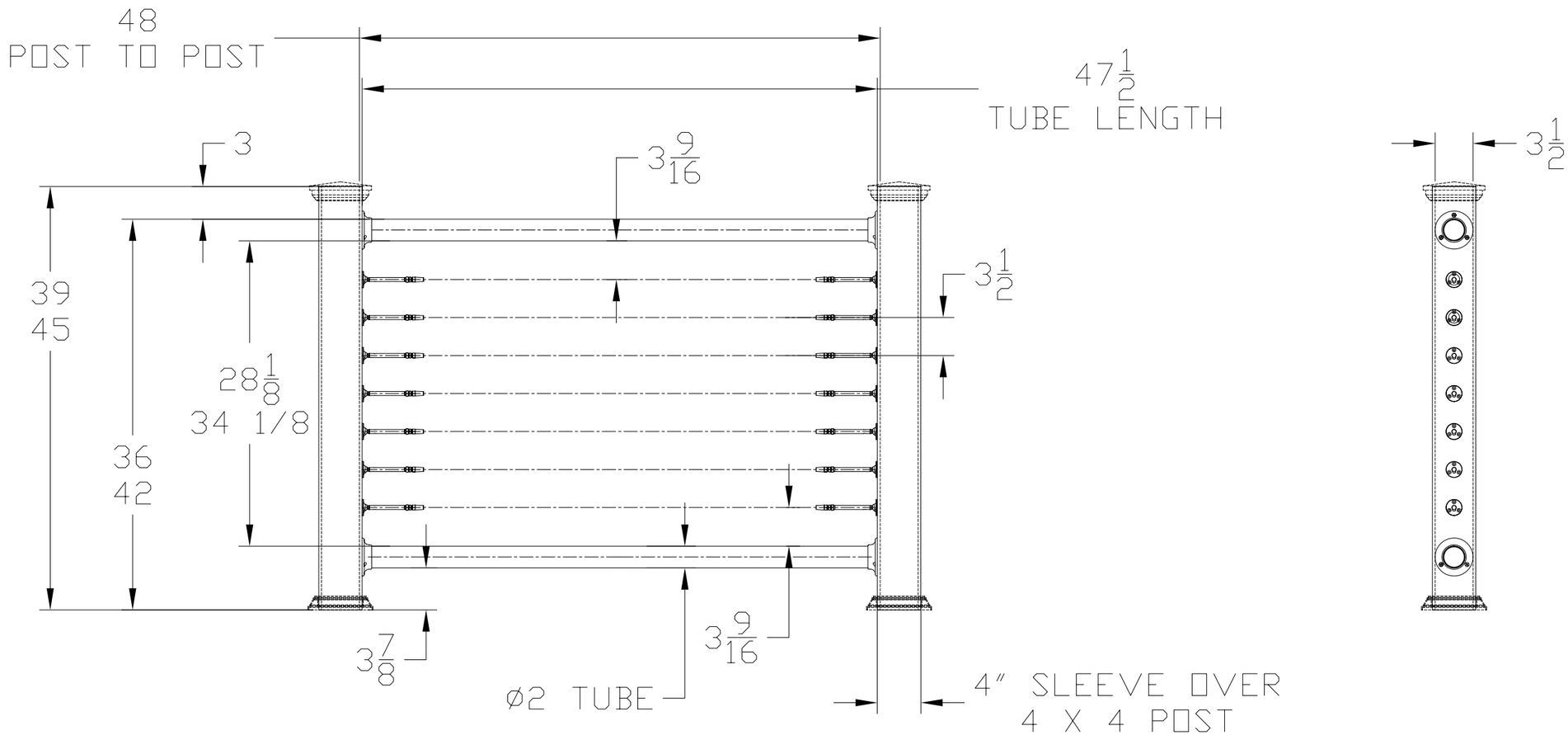

SPECIFICATIONS:

RECOMMENDED SPAN: 48" BETWEEN POSTS
WIRES MAY PASS THRU POSTS ON LONGER SPANS.

HANDRAIL: 2" DIAMETER 16 GAGE S/S 316 POLISHED TUBING

INFILL: RAIL EASY TURNBUCKLES WITH 7 X 7 316 S/S WIRE ROPE

POSTS: 4X4 POSTS WITH
VINYL SLEEVES, TOP AND BOTTOM CAP

SECURED TO POSTS WITH MOUNTING BASES AND #10
S/S SCREWS